Product data sheet

T1011

Dimensions in mm [inch]

Max weight: 80 kg

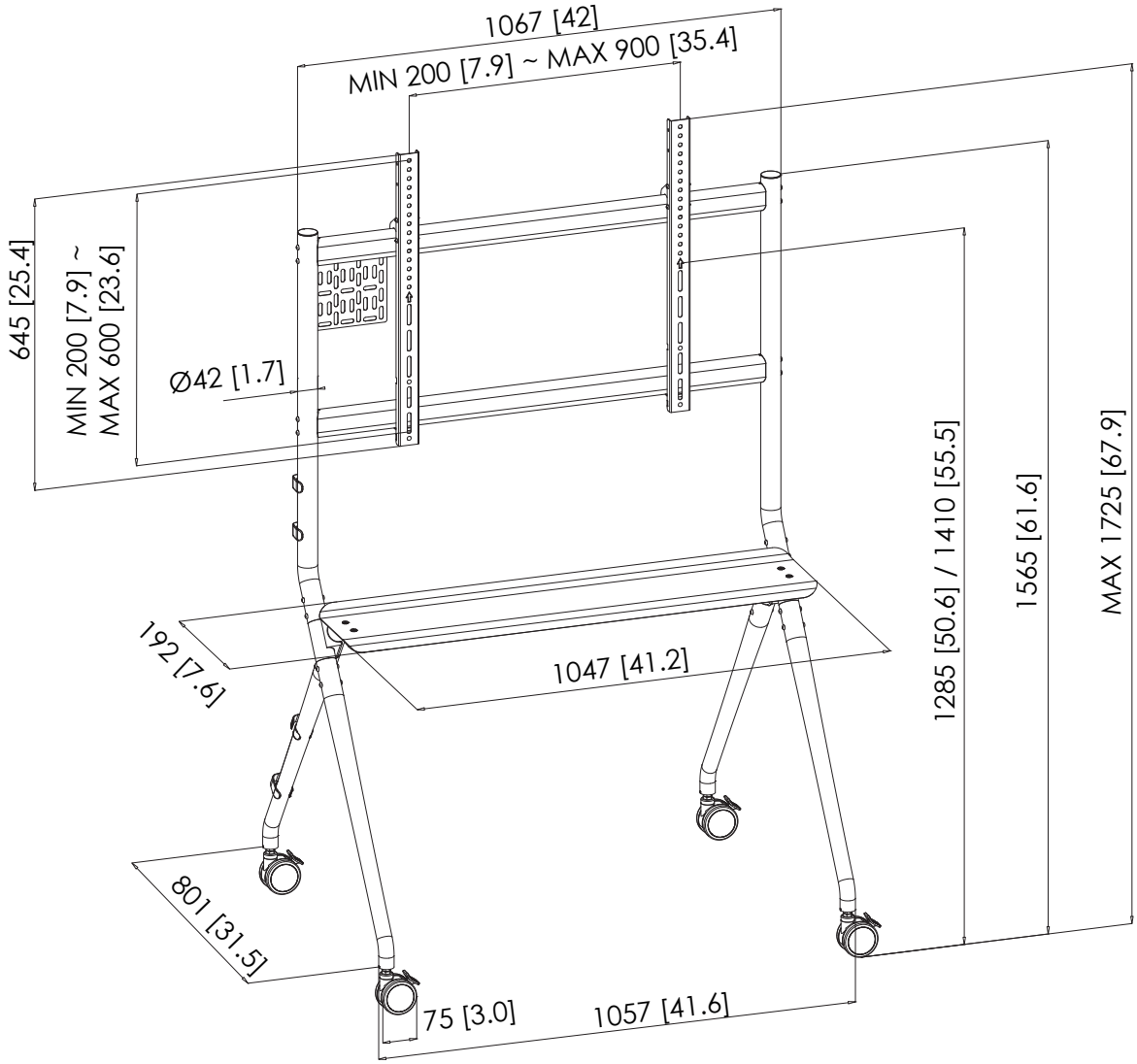

Note: This document and specifications herein are confidential and the exclusive property of Vogel's Products b.v. Neither this design nor any information contained in this drawing may be reproduced or disclosed to others without written consent of Vogel's Products b.v. The design and information will not be reproduced, copied or used, either in part or in its entirety, as the basis for the manufacture or sale of items without written permission.
Warning: Please study all instructions and illustrations carefully before installation.
Information in this document is subject to change without further notice.